Brüel & Kjær Vibro

Displacement sensors

Quality products from a single source

For more than 50 years Brüel & Kjær Vibro has been a leading manufacturer of vibration measuring instruments and machine condition monitoring systems.

Brüel & Kjær Vibro offers its customers world-wide services and a rapid and budget-conscious supply of system solutions.

For measurement and monitoring of mechanical vibration in rotating machinery, the technically correct acquisition of measurements is of decisive importance.

The right sensor for your measurement task!

The extensive programme of sensors from Brüel & Kjær Vibro offers the most suitable solution for every application.

Displacement sensors and inductive displacement sensors for measurement of

- **relative shaft vibration**
- **relative shaft position**
- **absolute and relative expansion**
- **speed and phase position**
- **eccentricity**

Velocity sensors for measurement of

- absolute case vibration
- absolute bearing vibration

All brochures are available in PDF-file format from: www.bkvibro.com

Brüel & Kjær Vibro reserves the right to change specifications and accessories without prior notification.

Displacement sensors

Displacements sensors from Brüel & Kjær Vibro are used world wide in large numbers and their reliability has been proven through long-term use in industry.
Displacement sensors are used for non-contacting measurement of

- relative shaft vibration
- relative shaft position (axial/radial position)
- eccentricity (shaft excursion)
- relative shaft expansion
- rod-drop displacement
- reference signals for speed and phase angle
- rotational direction and zero speed.

The non-contacting displacement sensors are distinguished in terms of their basic construction.

- The DS series with sealed ceramic sensor tip and IP 68 protection class; conventional structure with sensor, calibrated cable and external oscillator

- SD series consisting of sensor, calibrated cable and external oscillator

- Series with an integrated oscillator (type IN-)

The **inductive displacement sensor** is used for measurement of

- absolute casing expansion

Through different **sensor constructions** and practical installation accessories, machine constructional characteristics and special environmental conditions can be taken into consideration.

Therefore the optimally suitable displacement sensor from Brüel & Kjær Vibro can be selected with a view to

- the optimum displacement measuring range
- specific installation conditions
- operation in chemically aggressive conditions
- application at high temperatures
- installations in hazardous explosive areas and
- ruggedness and resistance to external influences

Overview: Displacement sensors

Measur-ing range	Sensor type	Page	Non-contacting	Contacting	Integrated Oscillator	Sensor body version			Special environment		
						full length thread	reverse mount	right-angled head	For use in hazardous area	Mechanical execution in protection class IP 68	For use in aggressive chemical environment
1.5 mm	IN-081		•		•	•					
	IN-083		•		•		•				
	IN-084		•		•			•			
	IN-085		•		•	•					
	INA-081		•		•	•			•		
	INA-083		•		•		•		•		
	INA-085	6	•		•	•			•		
2 mm	DS-1051		•			•			•	•	
	DS-1052		•			•			•	•	
	DS-1053		•				•		•	•	
	DS-1054	8	•					•	•	•	
	SD-051		•			•					
	SD-052		•			•					
	SD-053		•				•				
	SD-054	12	•					•			
3.5 mm	SD-081		•			•					
	SD-083		•				•				
	SD-084	14	•					•			
	SD-087		•			•					•
	SD-088		•			•					•
	SD-089	16	•				•				•
4 mm	SDH-151		•			•					
	SDH-154	18	•					•			
8 mm	SD-161		•			•					
	SD-164	20	•					•			
20 mm	WT-010	26		•							
50 mm	WT-025	26		•							

		Standard application							
e nt	For use at temperature > 180° C	Relative shaft vibration	Radial shaft position	Axial shaft position	Eccen-tricity	Relative expansion	Rod-drop reference	Speed & phase	Absolute expansion
		•	•	•	•			•	
		•	•	•	•			•	
		•	•	•	•			•	
		•	•	•	•			•	
		•	•	•	•			•	
		•	•	•	•			•	
		•	•	•	•			•	
		•	•	•	•			•	
		•	•	•	•			•	
		•	•	•	•			•	
		•	•	•	•			•	
		•	•	•	•			•	
		•	•	•	•			•	
		•	•	•	•			•	
		•	•	•	•			•	
		•	•	•	•			•	
		•	•	•	•			•	
		•	•	•	•			•	
		•	•	•	•			•	
	•	•	•	•	•		•	•	
	•	•	•	•	•		•	•	
						•	•	•	
						•	•	•	
									•
									•

Non-contacting displacement sensors with integrated oscillator

Types and dimensions

IN-081

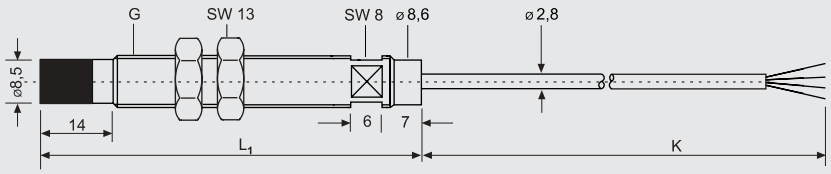

IN-083

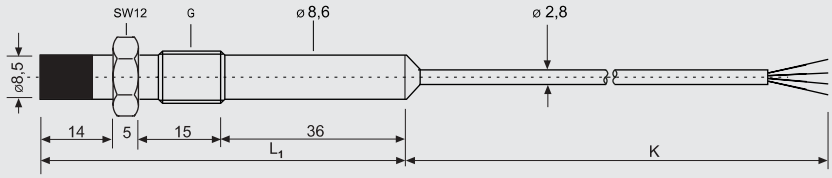

IN-084

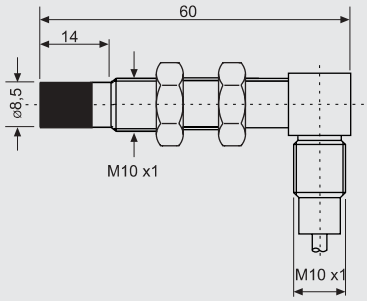

With thread G = 3/8”
diameter of the
sensor tip = 8.2 mm

Diameter of the
sensor body = 8 mm;
with IN(A)-085 = 9 mm

IN-085

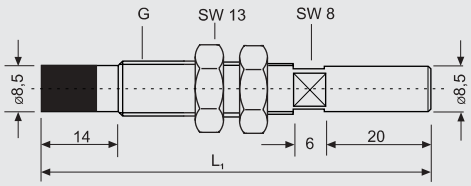

INA-081

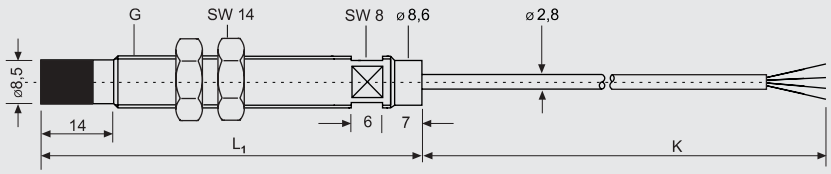

INA-083

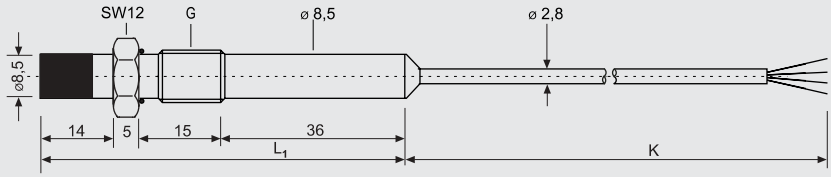

INA-085

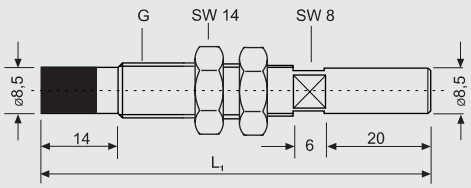

Displacement sensor with integrated oscillator					Order code
Sensor type					
General application	**IN-081**	**IN-083**	**IN-084**	**IN-085**	**IN-08X**
For use in hazardous area 1)	**INA-081**	**INA-083**		**INA-085**	**INA-08X**
Measuring range	1.5 mm				
Operating temperature range	0 ... +110° C (in hazardous area depending on temperature class)				
Sensor body version	full length thread	reverse mount (e.g. in sensor holder AC-101)	right-angled head	full length thread and connector	

1) Ex II 2 G Ex ib IIC T6 Ex II 2 D Ex ib D 21 T135°C

Thread G					**/X**
M 10 x 1 - 6 g	•	•	•	•	**3**
3/8“ - 24 UNF - 2A	o	o	–	o	**4**

Sensor body length L_1					**/XXX**
Standard lengths	–	–	60 mm	–	**060**
	70 mm	70 mm	–	70 mm	**070**
	110 mm	–	–	–	**110**
Special length	on enquiry				
Minimum length	70 mm	70 mm	60 mm	70 mm	
Maximum length	250 mm	–	60 mm	150 mm	

Cable length K					**/XX**
Standard length	–	–	–	0 m 2)	**00**
	5 m	5 m	5 m	–	**50**
Special length	on enquiry				

2) available accessories (cable AC-426 for IN-085, cable AC-429 for INA-085)

Special requirements (must be clarified in written form when ordering)					**/X**
no	•	•	•	•	**0**
yes	on enquiry				**1**

• preferred solution o optional solution – not available

Order example: IN-081/3/070/50/0

Non-contacting displacement sensors DS with 2 mm measuring range

Types and dimensions

DS-1051

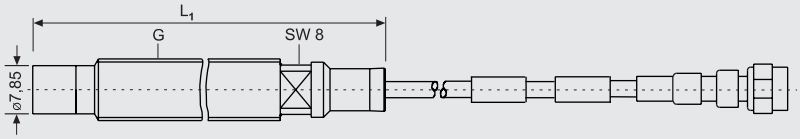

DS-1053

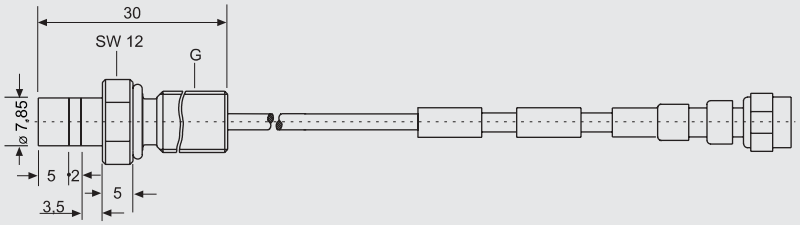

DS-1054

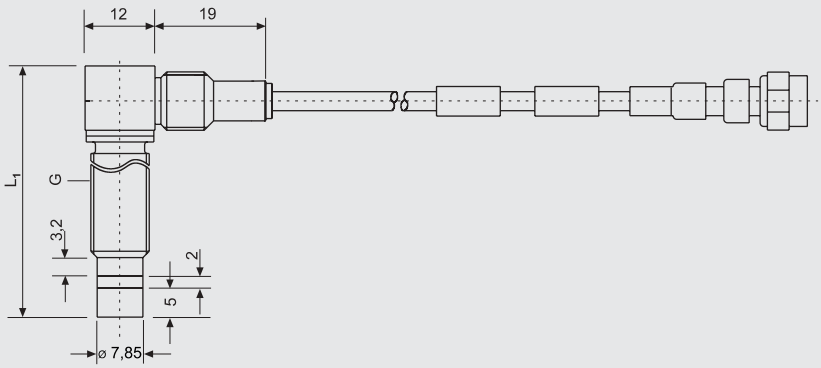

DS-1051 in standard form	Order code					
Sensor with full length thread	DS-1051	/XX	/XXX	/XXX	/X	/9
Thread G: M 10 x 1 - 6 g		03				
Thread G: 3/8“ - 24 UNF - 2A		04				
Sensor body length L_1: 45 mm			045			
Sensor body length L_1: 75 mm			075			
Sensor body length L_1: 105 mm			105			
Sensor cable length K: 1 m				010		
Sensor cable length K: 5 m				050		
preferred solution: no cable protection					1	
optional solution with cable protection: steel protective conduit					2	
optional solution with cable protection: PTFE protective conduit					3	
No special requirements						9

DS-1053 in standard form	Order code					
Reverse mount sensor	DS-1053	/03	/030	/XXX	/X	/9
Thread G: M 10 x 1 - 6 g		03				
Sensor body length L_1: 30 mm			030			
Sensor cable length K: 1 m				010		
Sensor cable length K: 5 m				050		
preferred solution: no cable protection					1	
optional solution with cable protection: PTFE protective conduit					3	
No special requirements						9

DS-1054 in standard form	Order code					
Sensor with right-angled head	DS-1054	/03	/034	/XXX	/X	/9
Thread G: M 10 x 1 - 6 g		03				
Sensor body length L_1: 34 mm			034			
Sensor cable length K: 1 m				010		
Sensor cable length K: 5 m				050		
preferred solution: no cable protection					1	
optional solution with cable protection: steel protective conduit					2	
optional solution with cable protection: PTFE protective conduit					3	
No special requirements						9

Order examples: DS-1051/03/045/010/1/9
DS-1053/03/030/010/1/9
DS-1054/03/034/010/1/9

Non-contacting displacement sensors DS with 2 mm measuring range

Types and dimensions

DS-1051

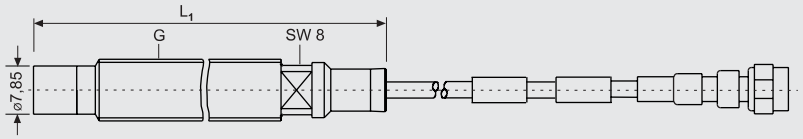

DS-1052

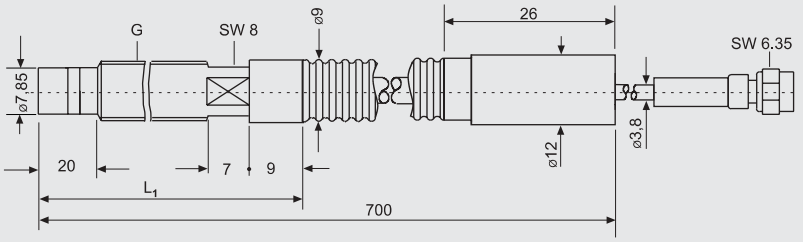

DS-1053

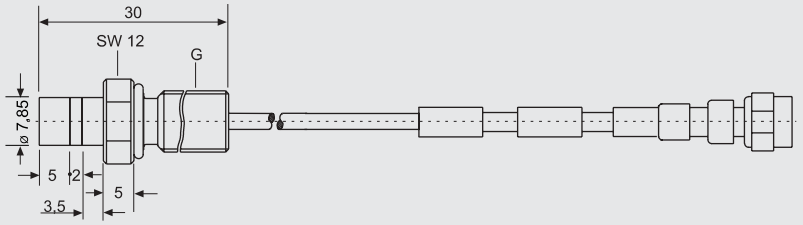

DS-1054

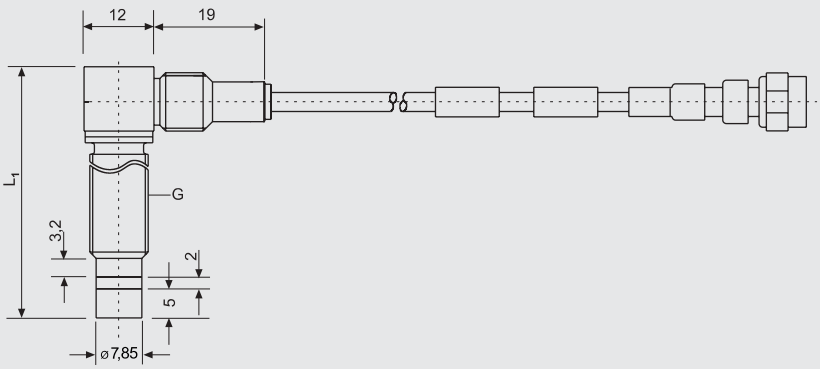

Non-contacting displacement sensors					Order code
	DS-1051	**DS-1052 ***	**DS-1053**	**DS-1054**	**DS-105X**
Application	general application and for use in hazardous area **				
Measuring range	2 mm				
Operating temperature range	-30 ... +180° C (in Ex area dependent on temperature class)				
Sensor body version	full length thread	full length thread with corrugated tube protection	reverse mount (e.g. in sensor holder AC-101)	right-angled head	

* The sensor type DS-1052 is only available on enquiry and after technical clarification.

** with marking Ex II 1/2 G Ex ia IIC T5/T4 Ex II 2 D Ex iaD 21 T100°C

Thread G					**/XX**
M 10 x 1 - 6 g	•	•	•	•	**03**
3/8“ - 24 UNF - 2A	•	o	o	o	**04**

Sensor body length L_1					**/XXX**
Standard lengths	–	–	30 mm	–	**030**
	–	–	–	34 mm	**034**
	45 mm	–	–	–	**045**
	75 mm	75 mm	–	–	**075**
	105 mm	–	–	–	**105**
Special lengths	135 mm	–	–	–	**135**
	165 mm				**165**
	195 mm				**195**
	225 mm				**225**
	255 mm				**255**
Minimum length	45 mm	45 mm	30 mm	34 mm	
Maximum length	255 mm	255 mm	30 mm	150 mm	

Sensor cable length K					**/XXX**
Standard length	1 m	1 m	1 m	1 m	**010**
	5 m	5 m	5 m	5 m	**050**

Cable protection					**/X**
no	•	–	•	•	**1**
Steel protective conduit	o	–	–	o	**2**
PTFE protective conduit	o	–	o	o	**3**
Corrugated tube, version A	–	•	–	–	**4**
Corrugated tube, version B	–	o	–	–	**5**

Special requirements (must be clarified in written form when ordering)					**/X**
no	•	–	•	•	**9**
yes	on enquiry				**1**

• preferred solution o optional solution – not available

Order example: DS-1051/03/075/010/1/9

Non-contacting displacement sensors SD with 2 mm measuring range

Types and dimensions

SD-051

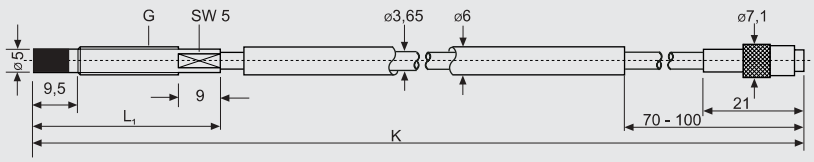

SD-052

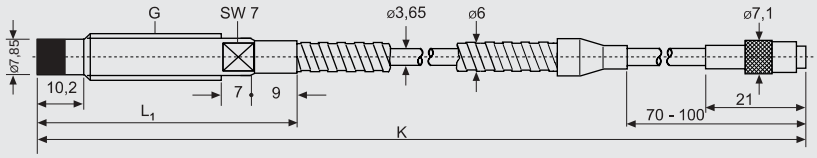

SD-053

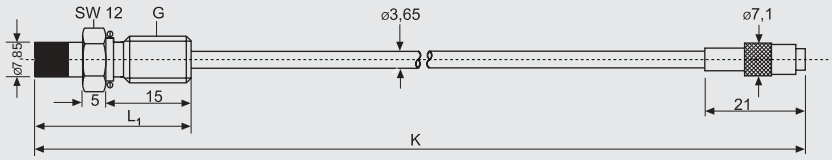

SD-054

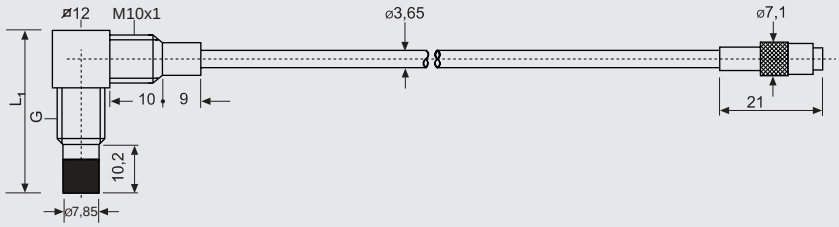

Non-contacting displacement sensors					Order code
Sensor type	**SD-051**	**SD-052**	**SD-053**	**SD-054**	**SD-05X**
Measuring range	2 mm				
Operating temperature range	-30 ... +180° C				
Sensor body version	full length thread	full length thread	reverse mount (e.g. in sensor holder AC-101)	right-angled head	
Thread G					**/X**
M 6 x 0.5 - 6 g	•	–	–	–	**1**
1/4“ - 28 UNF -2A	•	–	–	–	**2**
M 10 X 1 - 6 g	–	•	•	•	**3**
3/8“ -24 UNF - 2A	–	•	•		**4**
M 8 x 1	o	–	–	–	**7**
Sensor body length L_1					**/XXX**
Standard lengths	–	–	30 mm	–	**030**
	–	–	–	34 mm	**034**
	45 mm	45 mm	–	–	**045**
	75 mm	75 mm	–	–	**075**
	105 mm	105 mm	–	–	**105**
Special length	on enquiry				
Minimum length	45 mm	45 mm	30 mm	34 mm	
Maximum length	150 mm	255 mm	30 mm	150 mm	
Cable length K					**/XX**
Standard length	1 m	1 m	1 m	1 m	**10**
	5 m	5 m	5 m	5 m	**50**
Optional length	0.5	0.5 m	0.5 m	0.5 m	**05**
Cable protection					**/X**
without	•	•	•	•	**0**
Steel protective conduit	o	o	–	o	**1**
PTFE protective conduit	o	o	o	o	**2**
Special requirements (must be clarified in written form when ordering)					**/X**
no	•	•	•	•	**0**
yes	on enquiry				**1**

• preferred solution o optional solution – not available

Order example: SD-051/1/045/10/0/0

Non-contacting displacement sensors SD with 3.5 mm measuring range

Types and dimensions

SD-081

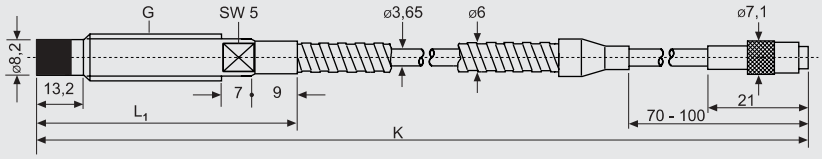

SD-083

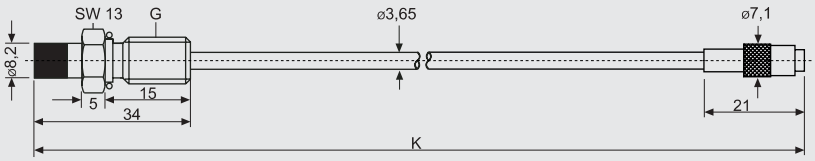

SD-084

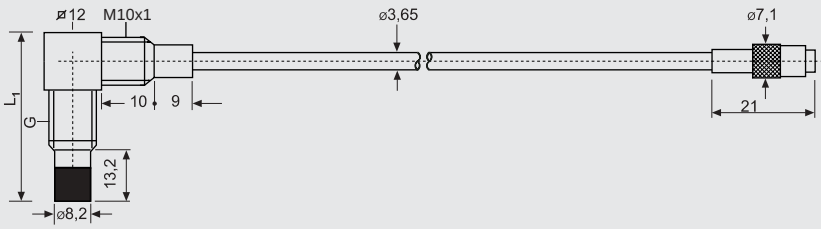

Non-contacting displacement sensors **Order code**

Sensor type	**SD-081**	**SD-083**	**SD-084**	**SD-08X**
Measuring range	3.5 mm			
Operating temperature range	-30 ... +180° C			
Sensor body version	full length thread	reverse mount (e.g. in sensor holder AC-101)	right-angled head	

Thread G				**/X**
M 10 x 1 - 6 g	•	•	•	**3**
3/8“ - 24 UNF - 2A	•	•	–	**4**
1/2“ - 20 UNF - 2A	o	–	–	**5**

Sensor body length L_1				**/XXX**
Standard lengths	–	34 mm	34 mm	**034**
	75 mm	–	–	**075**
Special length	on enquiry			
Minimum length	45 mm	34 mm	34 mm	
Maximum length	255 mm	34 mm	150 mm	

Cable length K				**/XX**
Standard length	1 m	1 m	1 m	**10**
	5 m	5 m	5 m	**50**
Optional length	0.5 m	0.5 m	0.5 m	**05**

Cable protection				**/X**
without	•	•	•	**0**
Steel protective conduit	o	–	o	**1**
PTFE protective conduit	o	o	o	**2**

Special requirements (must be clarified in written form when ordering)				**/X**
no	•	•	•	**0**
yes	on enquiry			**1**

• preferred solution o optional solution – not available

Order example: SD-081/3/075/10/0/0

Chemically resistant displacement sensors SD with 3.5 mm measuring range

Types and dimensions

SD-087

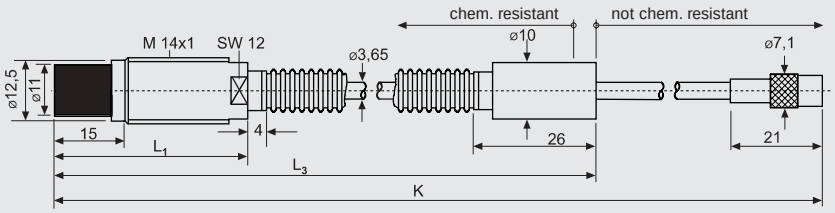

SD-088

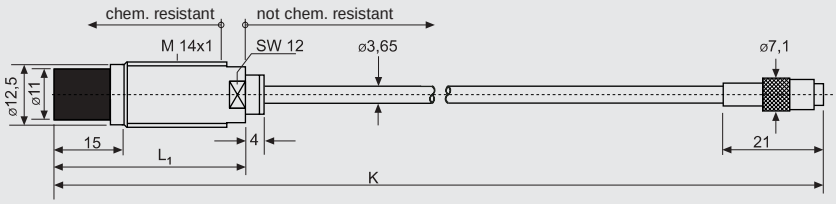

SD-089

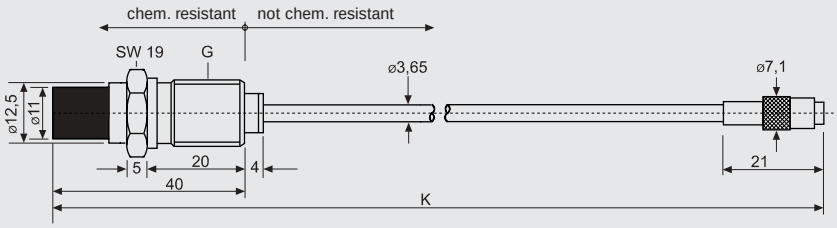

Chemically resistant non-contacting displacement sensors				Order code
Sensor type	**SD-087**	**SD-088**	**SD-089**	**SD-08X**
Measuring range		3.5 mm		
Operating temperature range		-30 ... +100° C		
Sensor body version	full length thread and corrugated tube protection	full length thread	reverse mount	

Thread G				**/X**
M 10 x 1 - 6 g	–	–	•	**3**
M 14 x 1	•	•	•	**8**

Sensor body length L_1				**/XXX**
Standard lengths	–	–	40 mm	**040**
	75 mm	75 mm	–	**075**
Special length	on enquiry		–	
Minimum length	40 mm	40 mm	40 mm	
Maximum length	250 mm	250 mm	40 mm	

Cable length K				**/XX**
Standard length	1 m	1 m	1 m	**10**
	5 m	5 m	5 m	**50**

Cable protection				**/XXX**
without	–	•	•	**000**
St. steel corrugated tube, L_3 = 700 mm	700	–	–	**700**
Special length of corrugated tube	on enquiry	–	–	
Minimum length	L_1 + 80 mm	–	–	
Maximum length	K - 250 mm	–	–	

Special requirements (must be clarified in written form when ordering)				**/X**
no	•	•	•	**0**
yes	on enquiry			**1**

• preferred solution – not available

Order example: SD-087/8/075/10/700/0

High-temperature displacement sensors SDH with 4 mm measuring range

Types and dimensions

SDH-151

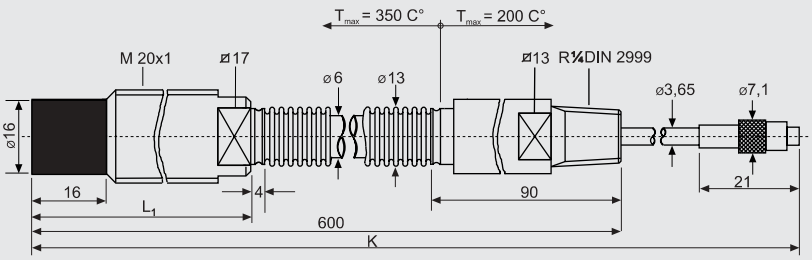

SDH-154

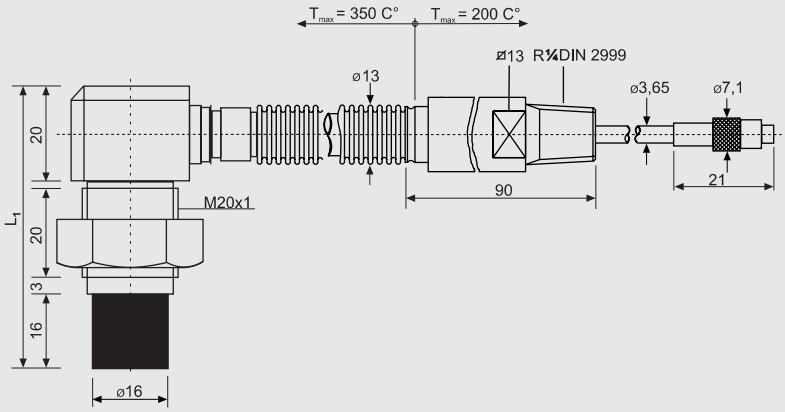

High temperature non-contacting displacement sensors Typ SDH-15X			Order code
Sensor type	**SDH-151**	**SDH-154**	**SDH-15X**
Measuring range	4 mm		
Operating temperature range	-30 ...+ 350 °C		
Sensor body version	full length thread and corrugated tube protection	right-angled head and corrugated tube protection	
Thread G			**/6**
M 20 x 1	•	•	**6**
Sensor body length L_1			**/XXX**
Standard lengths	–	50 mm	**050**
	105 mm	–	**105**
Special length	on enquiry		
Minimum length	65 mm	50 mm	
Maximum length	255 mm	150 mm	
Cable length K			**/50**
Standard length	5 m	5 m	
Cable protection (for the cable behind the corrugated tube)			**/0**
without	•	•	**0**
Special requirements (must be clarified in written form when ordering)			**/X**
no	•	•	**0**
yes	on enquiry		**1**

• preferred solution – not available

Order example: SDH-151/6/105/50/0/0

Non-contacting displacement sensors SD with 8 mm measuring range

Types and dimensions

SD-161

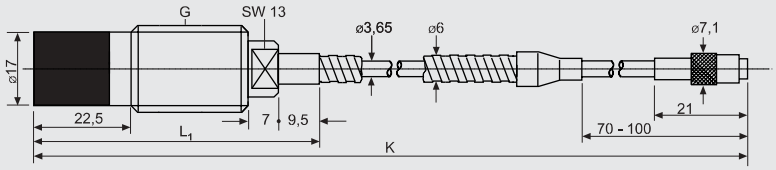

SD-164

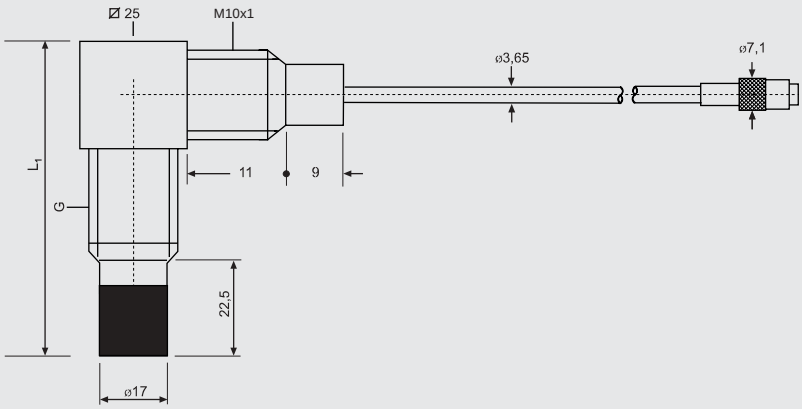

Non-contacting displacement sensors			Order code
Sensor type	**SD-161**	**SD-164**	**SD-16X**
Measuring range	8 mm		
Operating temperature range	-30 ... +180° C		
Sensor body version	full length thread	right-angled head	
Thread G			**/6**
M 20 x 1	•	•	**6**
Sensor body length L_1			**/XXX**
Standard lengths	–	50 mm	**050**
	105 mm	–	**105**
Special length	on enquiry		
Minimum length	75 mm	50 mm	
Maximum length	255 mm	150 mm	
Cable length K			**/XX**
Standard lengths	1 m	1 m	**10**
	5 m	5 m	**50**
Optional length	0.5 m	0.5 m	**05**
Cable protection			**/X**
without	•	•	**0**
Steel protective conduit	o	o	**1**
PTFE protective conduit	o	o	**2**
Special requirement (must be clarified in written form when ordering)			**/X**
no	•	•	**0**
yes	on enquiry		**1**

• preferred solution o optional solution – not available

Order example: SD-161/6/105/10/0/0

Extension cables and oscillators for displacement sensors DS

Types and dimensions

EC-1001

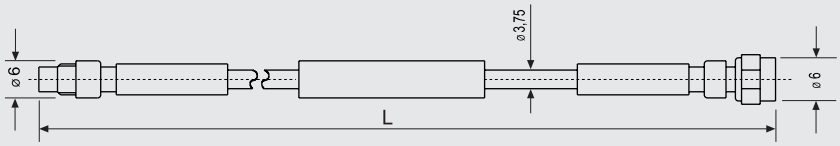

EC-1002

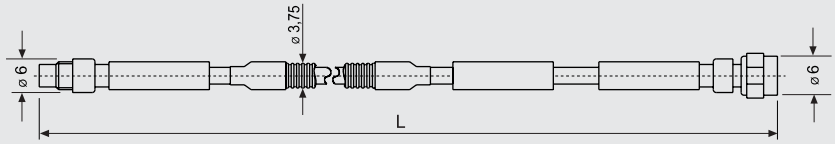

EC-1003

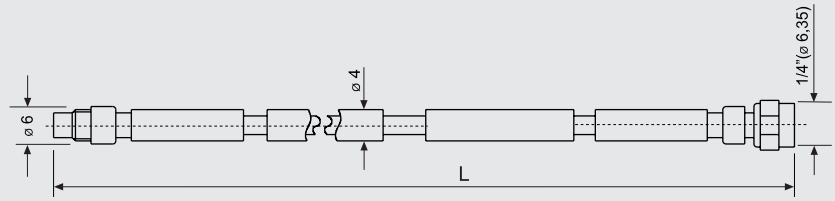

OD-105X

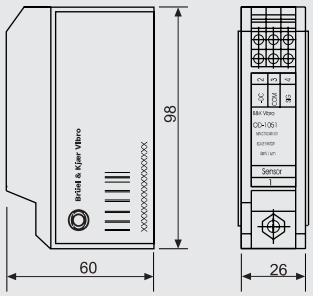

OD-105X

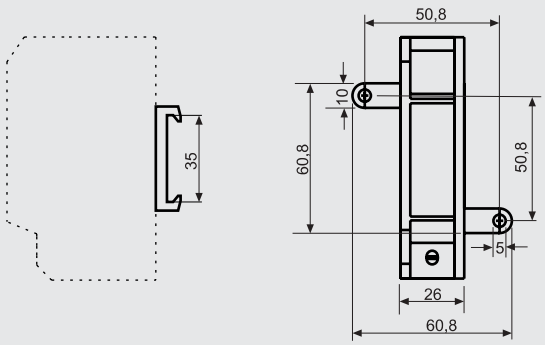

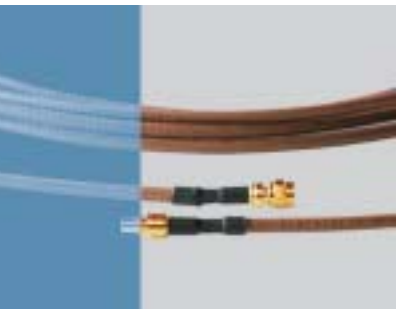

Extension cables for DS-1051/DS-1052/DS-1053/DS-1054	Order code			
	EC-100X			/XXX
preferred solution: no protection	EC-1001			
optional solution with steel protective conduit		EC-1002		
optional solution with PTFE protective conduit			EC-1003	
preferred solution in conjunction with OD-1051: cable length L = 4 m (-0.4 m/+0.6 m)				040
preferred solution in conjunction with OD-1053: cable length L = 9 m (-0.4 m/+0.6 m)				090
optional solution in conjunction with OD-1053: cable length L = 5 m (-0.4 m/+0.6 m)				050

Order example: EC-1001/040

Oscillator for DS-1051/DS-1052/DS-1053/DS-1054	Order code
2 mm measuring range, standard version, for total cable length M = K + L = 5 m	OD-1051
2 mm measuring range, standard version, for total cable length M = K + L = 10 m	OD-1053

Extension cables and oscillators for displacement sensors SD

Types and dimensions

EC-001

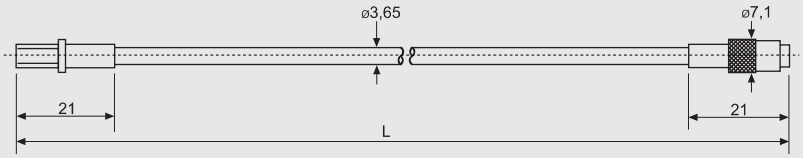

EC-002

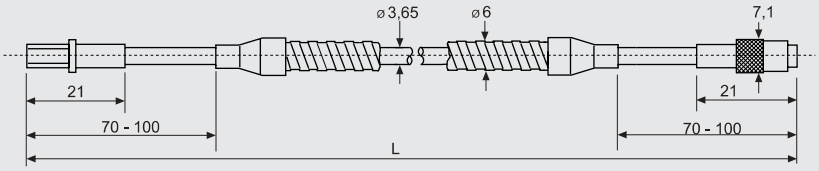

EC-003

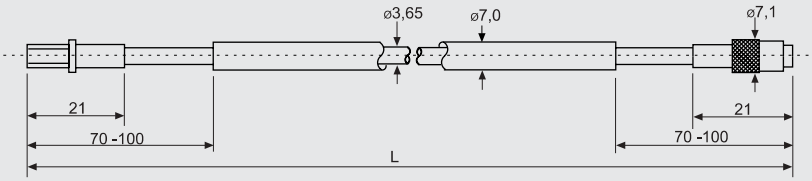

OD-05X
OD-08X
OD-151
OD-162

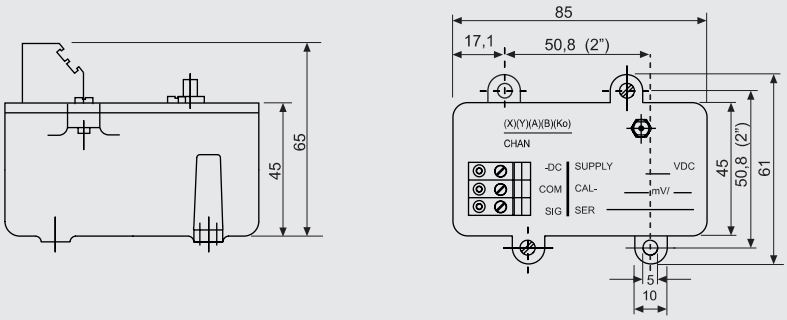

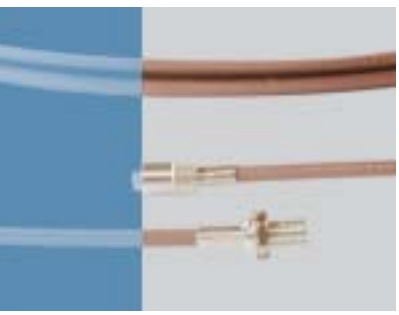

Extension cables for SD-05X/SD-08X/SD-16X/SDH-15X — **Order code**

	EC-00X			/XX	/X
preferred solution: no protection	**EC-001**				
optional solution with steel protective conduit		**EC-002**			
optional solution with PTFE protective conduit			**EC-003**		
in conjunction with OD-051/OD-054/OD-081/OD-151/OD-162: cable length L = 4 m (-0.4 m / +0.6 m)				**40**	
in conjunction with OD-051/OD-054/OD-081/OD-151/OD-162: cable length L = 4.5 m (-0.4 m / +0.6 m)				**45**	
in conjunction with OD-053/OD-083: cable length L = 9 m (-0.4 m / +0.6 m)				**90**	
in conjunction with OD-053/OD-083: cable length L = 9.5 m (-0.4 / +0.6 m)				**95**	
preferred solution: no special requirements					**0**
Special requirements must be clarified in written form when ordering					**1**

Order example: EC-001/40/0

Oscillator — **Order code**

Associated sensor type	Measuring range	Operating temperature	Total cable length	
for displacement sensor type SD-05X	2 mm	-30 ... +65° C	M = K + L = 5 m	**OD-051**
			M = K + L = 10 m	**OD-053**
		+100° C	M = K + L = 5 m	**OD-054**
			M = 1,5 m	**OD-055**
for displacement sensor type SD-08X	3.5 mm	-30 ... +65° C	M = K + L = 5 m	**OD-081**
			M = K + L = 10 m	**OD-083**
for displacement sensor type SDH-15X	4 mm		M = 5 m	**OD-151**
for displacement sensor type SD-16X	8 mm		M = K + L = 5 m	**OD-162**
for displacement sensor type SD-16X	8 mm		M = K + L = 5 m	**OD-165**

For measuring relative expansion with one pair of SD-16X sensors it is recommended to use 1 x OD-162 and 1 x OD-165

Displacement sensor

Types and dimensions

WT-010/WT-025

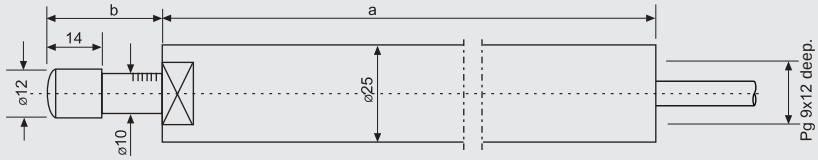

Dimensions	WT-010	WT-025
a	195 mm	265 mm
b	30 mm	45 mm

SP-502

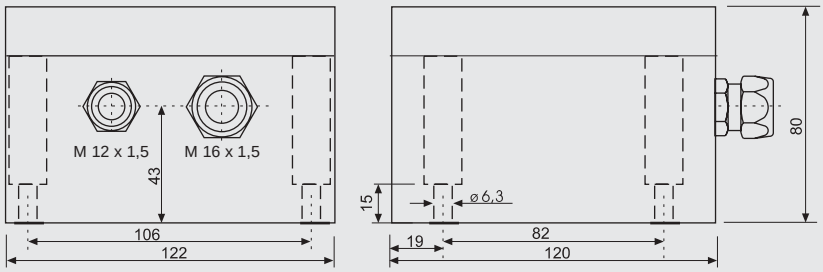

AC-175

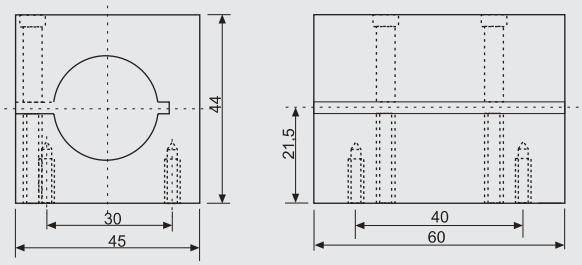

Displacement sensor for absolute expansion	Order code	
	WT-0XX	
Linear measuring range +/- 10 mm	WT-010	
Linear measuring range +/- 25 mm		WT-025

Accessories for Displacement sensor	Order code
Signal processor	SP-502
Mounting block for Displacement sensor	AC-175
Power supply for SP-502 (230 V AC/ +24 V DC, 1 A)	AC-4601

Components of the measuring chain		
Displacement sensor	WT-010	WT-025
Signal processor	SP-502	
Mounting block for sensor	AC-175	

Measuring and electrical properties		
Operating principle	Inductive differential choke with carrier frequency amplifier	
Total measurement range	20 mm	50 mm
Nominal range	+/- 10 mm	+/- 25 mm
Sensitivity	500 mV/mm	200 mV/mm
Operating frequency range	DC ... 200 Hz (-3 dB)	
Supply voltage	U_B = +24 V DC (+20 ... +30 V DC)	
Max. power consumption	2 W	
Output signal	0 ... 10 V (at load R_L (1 kΩ)	
	optionally: 4 ... 20 mA (at load $R_L \leq 500\ \Omega$)	
Zero point adjustment	+/- 10% of nominal range	
Sensitivity deviation	< 0.1 % of nominal range	
Linearity error	< 0.1 %	

Other technical data for WT-010 / WT-025		
Operating temperature range	-50 ... +120° C	
Storage temperature range	-50 ... +120° C	
Protection class	IP 54	
Total weight	approx. 500 g	approx. 650 g
Connection cable to SP-502	integral cable, 5 m long, with protective conduit	

Other technical data for SP-502	
Operating temperature range	0 ... + 60° C
Storage temperature range	-25 ... +85° C
Protection class	IP 65
Housing size	122 x 120 x 80 mm (Length x Width x Height)
Total weight	approx. 2 kg
Electrical connection for power supply and output signal	terminal connector inside the housing

Non-contacting displacement sensors with external oscillator: Technical data

Measuring chain components			
Displacement sensor	**DS-105X**		
Extension cable	**EC-100X/XXX**		
Oscillator	**OD-1051**	**OD-1053**	**OD**

Measuring and electrical properties		
Operating principle		
Linear measuring range	2 mm	
Operating frequency range		
Sensitivity	8 mV/µm	
Recommended operating point		
Supply voltage	U_B = -24 V DC (-18 ... -30 V DC)	
Maximum current consumption	16 mA	
Output signal		
Cable length for output signal	max. 1000 m	
Output impedance		
Sensitivity deviation		
Deviation from reference line	< 25 µm in testing range 0 ... 45° C; < 76 µm in operating temperature range	

Ex-protection according to directive 94/9/EG ATEX		
Designation	II 1/2 2 G Ex ia IIC T5/T4 II 2 D Ex iaD 21 T100°C	

Displacement sensor		
Sensor type	**DS-1051** **DS-1052** **DS-1053** **DS-1054**	
Sensor tip material	Ceramic	
Sensor tip diameter	7.85 mm	
Sensor body material		
Thread		
Protection class	IP 68 (5 bar, EN 60529)*	
Operating temperature range	-30 ... +180° C (in Ex area dependent on temperature class)	
Storage temperature range		
Sensor cable	75 Ohm tri-axial cable	
Cable jacket		
Cable length K	1 m (-0.2/+0.3 m) or 5 m (-0.5/+0.6 m)	
Minimum cable bending radius		
Cable end		

* The sensor type DS-105x can be delivered, on enquiry, with increased demand on pressure resistance.

SD-05X				SD-08X		SD-16X	SDH-15X
EC-001/XXX or EC-002/XX/X or EC-003/XX/X							–
-051	OD-053	OD-054	OD-055	OD-081	OD-083	OD-162	OD-151
Eddy-current principle							
				3.5 mm		8 mm	4 mm
DC ... 10 kHz (- 3 dB)							
				4 mV/µm		2 mV/µm	4 mV/µm
-9 ... -11 V DC GAP-voltage							
U_B = -24 V DC (-18 ... -26 V DC)							
30 mA							
nominally -2 ... -18 V (-2 ... (U_B + 2 V)							
(only for OD-105X: requirements for use in hazardous area must be considered)							
approx. 5 Ohm							
< 5 % in testing range 0 ... 45° C; < 10 % in operating temperature range							
< 7% in operating temperature range							
not approved for use in hazardous areas							
SD-051 SD-052 SD-053 SD-054				**SD-081 SD-083 SD-084**	**SD-087 SD-088 SD-089**	**SD-161 SD-164**	**SDH-151 SDH-154**
Epoxy				Epoxy	Ceramic	Epoxy	Ceramic
7.5 mm (for SD-051:5 mm)				8.2 mm	11 mm	17 mm	16 mm
stainless-steel							
see ordering information							
-30 ... +180° C					-30 ... +100° C	-30 ... +180° C	-30 ... +350° C
-55 ... +180° C					-30 ... +100° C	-55 ... +180° C	-50 ... +425° C
95 Ohm co-axial cable							
FEP							
1 m (-0.2/+0.3 m) or 5 m (-0.5/+0.6 m)							5 m (-0.5/+0.6 m)
25 mm (100 mm for configuration with corrugated tube protection)							
Co-axial plug connector							

Non-contacting displacement sensors with external oscillator: Technical data

Extension cable

Extension cable type	**EC-100X/XXX**		
Cable type	75 Ohm tri-axial cable		
Cable jacket			
Cable length L	4 m (-0.4/+0.6 m)	5 m (-0.4/+0.6 m) or 9 m (-0.4/+0.6 m)	
Minimum cable bending radius			
Operating temperature range			

Oscillator

Oscillator type	**OD-1051**	**OD-1053**	**C**
Associated sensor type	DS-105X		
Total length M (= K + L) of sensor integral cable and extension cable	5 m	10 m	
Operating temperature range	-30 ... +65° C		
Storage temperature range			
Protection class			
Housing material			
Housing size (Length x Width x Height)	98 mm x 26 mm x 60 mm		
Housing weight			
Connection for sensor cable			
Connection for signal output & supply			
Other			

EC-001/XXX or EC-002/XX/X or EC-003/XX/X	
95 Ohm co-axial cable	
FEP	
depending on sensor cable length and selected oscillator: 4 m (-0.4/+0.6 m) or 4.5 m (-0.4/+0.6 m) or 9 m (-0.4/+0.6 m) or 9.5 m (-0.4/+0.6 m)	
25 mm	
-50 ... +200° C	

OD-051	**OD-053**	**OD-054**	**OD-055**	**OD-081**	**OD-083**	**OD-162**	**OD-151**
SD-05X				SD-08X		SD-16X	SDH-15X
5 m	10 m	5 m	1.5 m	5 m	10 m	5 m	5 m
-30 .... + 65° C		-20 ... +100° C		-30 ... +65° C			
-55 ... +100° C							
IP 20							
Aluminium							
85 mm x 61 mm x 65 mm							
approx. 300 g							
Co-axial housing plug							
3-pole terminal block							
Isolated mounting in protective housing is recommended.							

Non-contacting displacement sensors with integrated oscillator: Technical data

Measuring chain

Sensor type	IN-081, IN-083, IN-084	IN-085	INA-081, INA-083	INA-085

Measuring and electrical properties

Operating principle	Eddy-current principle	
Linear measuring range	1.5 mm	
Operating frequency range	DC ... 10 kHz (-3 dB)	
Sensitivity	8 mV/µm	
Recommended operating point	-9 ... -11 V DC GAP-voltage	
Supply voltage	U_B = -24 V DC (-18 ... -30 V DC)	
Maximum current consumption	5 mA	
Output signal	nominally -2 ... -18 V (-2 ... (U_B+ 2 V)	
Cable length for output signal	max. 1000 m	requirements for use in hazardous area must be considered
Output impedance	approx. 5 Ohm, max. 15 mA	
Sensitivity deviation	< 5 % in testing range 0 ... 45° C; < 10 % in operating temperature range	
Deviation from reference line	< 25 mm in testing range 0 ... 45° C; < 76 mm in operating temperature range	

EX-protection according to directive 94/9/EG ATEX

Designation	not approved for hazardous area	II 2 G Ex ib IIC T6 II 2 D Ex ib D 21 T135°C

Mechanical data

Sensor tip material	Epoxy
Sensor tip diameter	8.5 mm
Sensor body material	stainless-steel
Thread	see order information

Ambient conditions

Operating temperature range	0 ... +110° C (in Ex area dependent on temperature class)
Storage temperature range	-50 ... +150° C

Electrical connection

Integral cable, open ended	yes	-	yes	-
Connector plug	-	yes	-	yes
Cable type	3-wire, screened	-	3-wire, screened	-
Standard cable length K	5 m	-	5 m	-
Cable jacket	PVDF	-	PVDF	-
Minimum cable bending radius	20 mm	-	20 mm	-
Operating temperature range	-20 ... +125° C	-	-20 ... +125° C	-

Our centres in Darmstadt and Nærum

office in Darmstadt

office in Nærum

Installation examples for displacement measuring chains

Reverse-mounted displacement sensors with integrated oscillator
Sensor holder AC-101; Adapter AC-2301
Protective conduit M16 2201/16; Protective conduit fittings M16 AC-2202/16
Junction box AC-2104/0

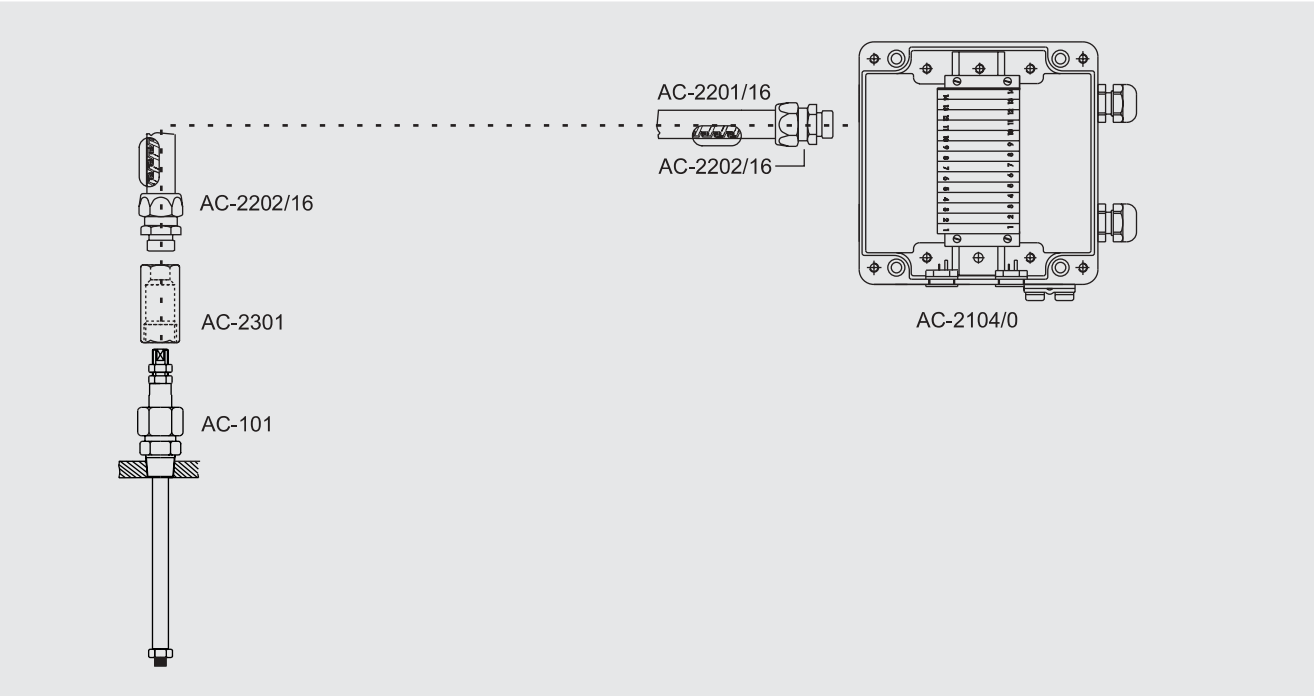

Reverse-mounted displacement sensors with external oscillator
Sensor holder AC-101; Adapter AC-323; Terminal head AC-104; Adapter AC-323; Protective conduit AC-2201/16; Protective conduit fittings M16 AC-2202/16; Oscillator protective housing AC-2106

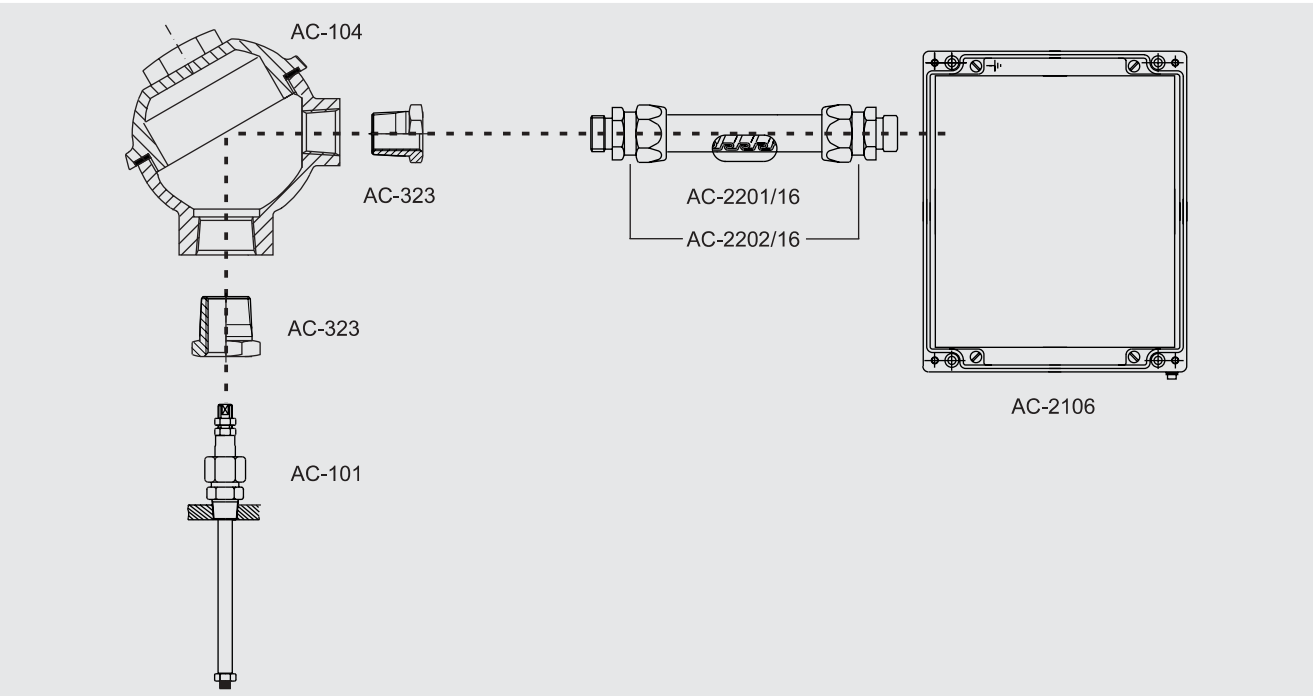

Space-saving installation of displacement sensors with continuous thread on small machines
Sensor holder AC-105; Terminal head AC-104; Adapter AC-323 and protective conduit AC-2201/16;
Protective conduit fittings M16 AC-2202/16;
Oscillator protective housing AC-2106 or junction box AC-2104/0

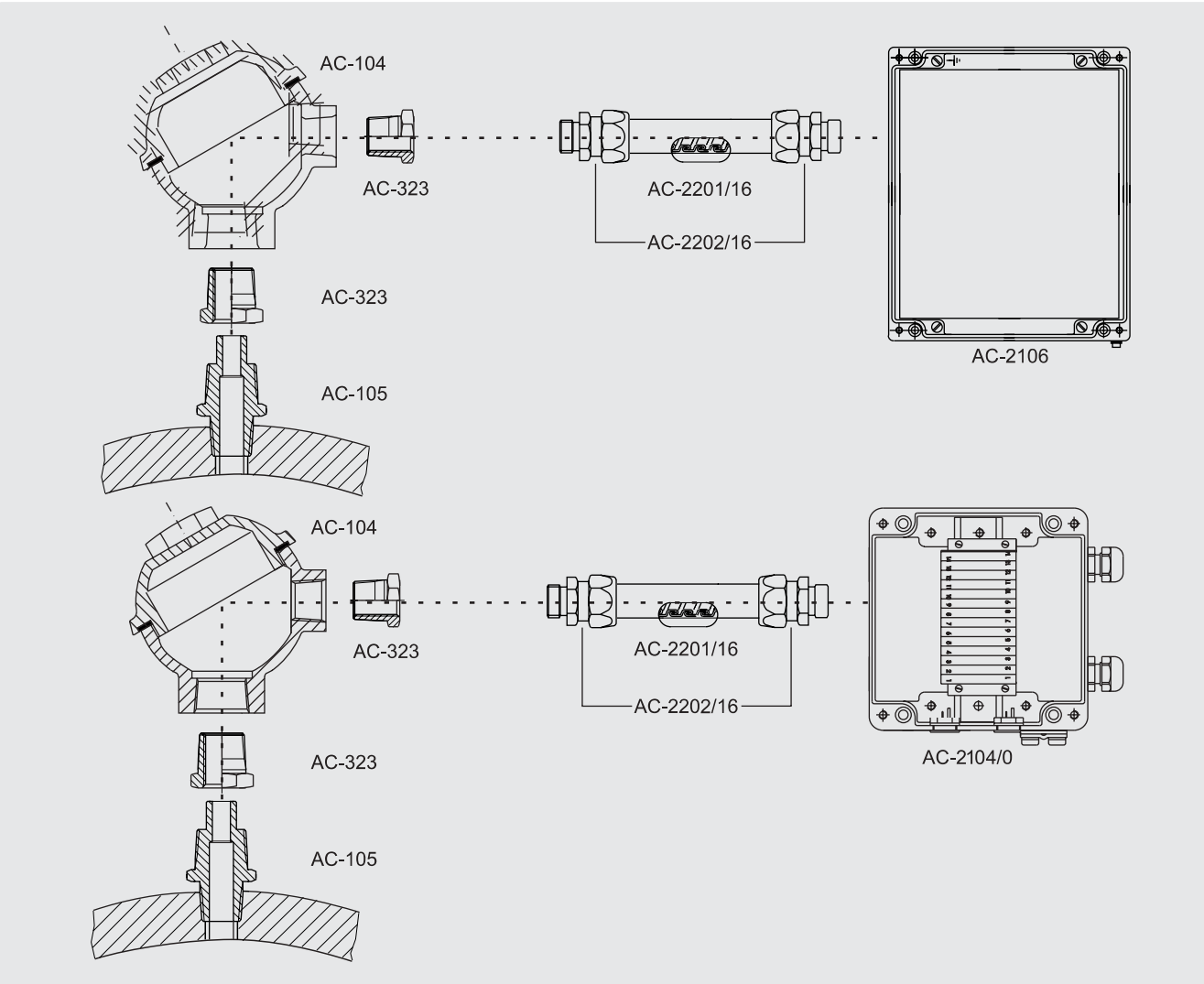

Machine foundation mounting of displacement sensor for measurement of absolute case expansion
Mounting block AC-175; Displacement sensor WT-010/025; Signal processor SP-502 in protective housing; plus sep. power supply AC-4601

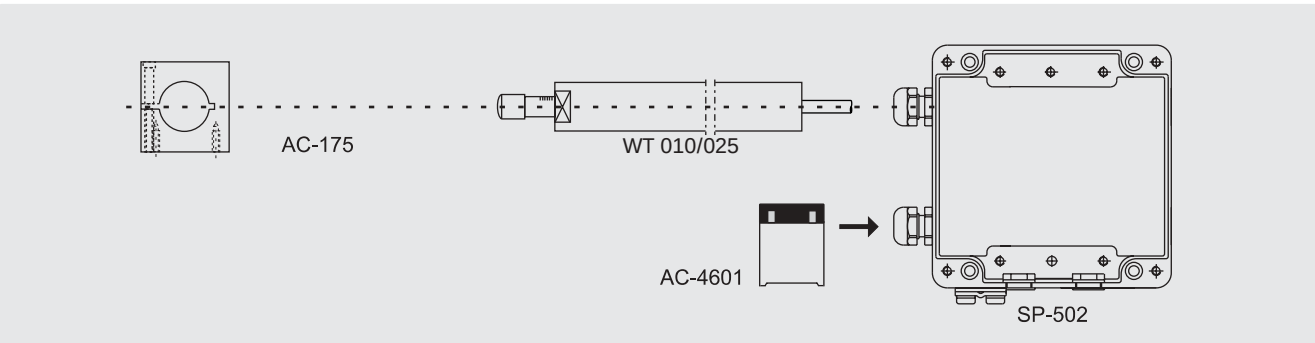

11. Status 0310 o All information non-binding. Right of alteration reserved • Design: LowinskyART • BBR 0016-EN-12

Brüel & Kjær Vibro A/S
Skodsborgvej 307B
2850 Nærum
Denmark
Tel.: +45 77 41 25 00
Fax: +45 45 80 29 37
info@bkvibro.com

Brüel & Kjær Vibro GmbH
Leydheckerstr. 10
64293 Darmstadt
Germany
Tel.: +49 (0) 6151 428 11 00
Fax: +49 (0) 6151 428 12 00
info@bkvibro.de

www.bkvibro.com